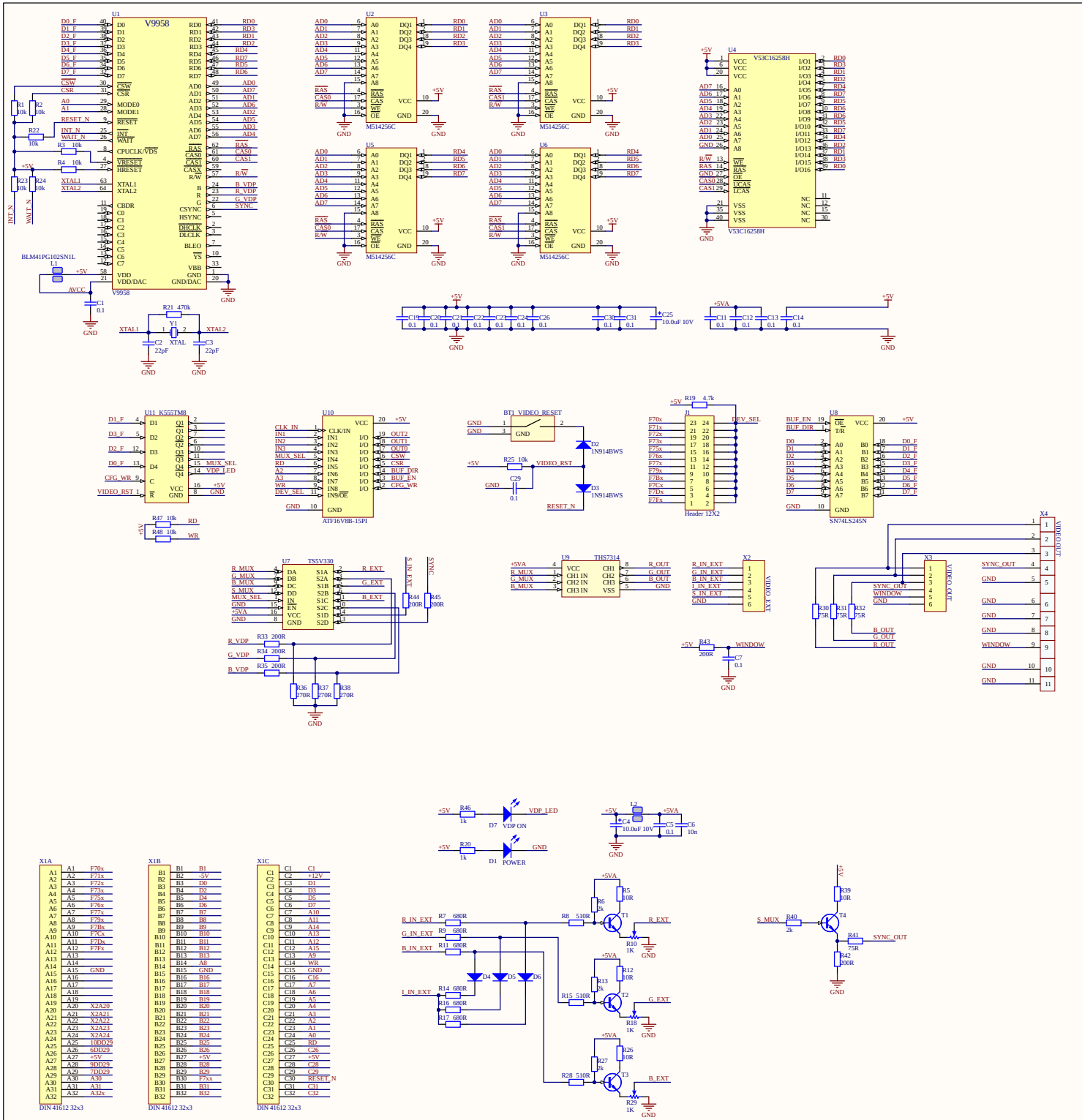
U1 V9958
U2 M514256C
U3 M514256C
U4 V53C16258H
U5 M514256C
U6 M514256C
U11 K555TM8
U10 ATF16V8B-15PI
BT1 VIDEO_RESET
J1 Header 12X2
U8 SN74LS245N
U7 TS5V330
U9 THS7314
X1A DIN 41612 32x3
X1B DIN 41612 32x3
X1C DIN 41612 32x3
X2 VIDEO EXT
X3 VIDEO OUT
X4 VIDEO OUT
T1
T2
T3
T4
J2 +12V
J3 -12V
D1 POWER
D7 VDP ON
GND
+5V
+5VA